Name the Film

Using Trigonometry to Find Angles

A	B	C	D	E	F	G	H	I	J	K	L	M
60.6°	29.4°	54.5°	22.5°	16.6°	37.1°	34.1°	51.8°	55.9°	78.1°	38.2°	85.9°	4.6°

N	O	P	Q	R	S	T	U	V	W	X	Y	Z
45.6°	52.9°	27.2°	44.4°	43.3°	35.5°	38.9°	62.8°	4.1	82.9°	43.8°	29.3°	46.7°

Calculate each angle x to 1 decimal place, find your answers in the table above and unjumble the letters to find the name of a film:

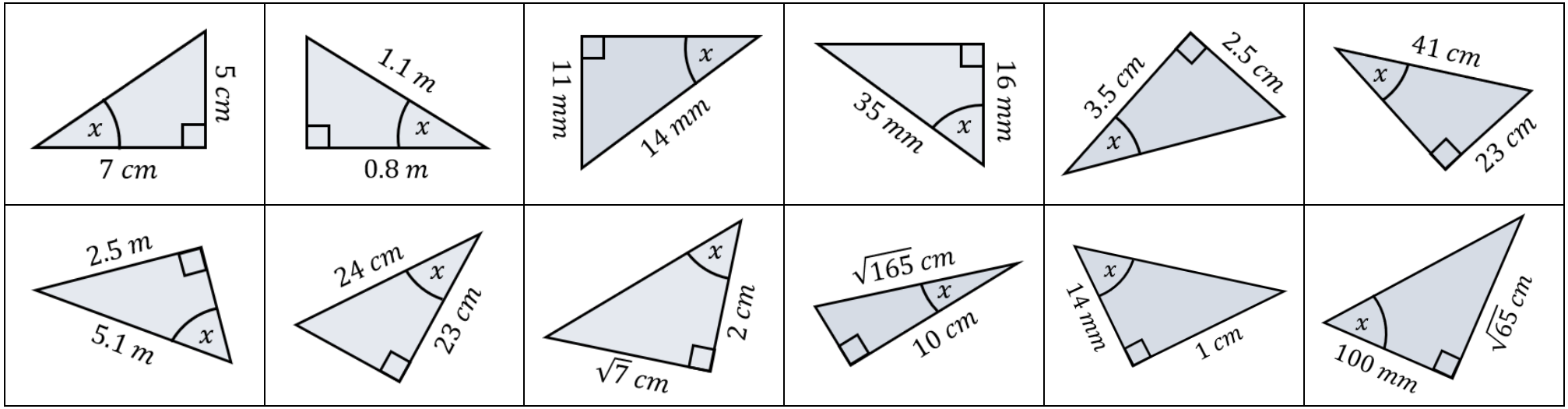

Letters:													Film:	